NOBLE
STONE COLLECTION

Model

NAR10-18-3320

Size

33 1/8” x 20 1/8” x 9”OD
31” x 16” x 10” ID

Finish

Brushed Nickel

Features

- 10mm radius apron front kitchen sink
- Single bowl
- 18 gauge
- 304 stainless steel sink
- 18/10 chromium/nickel content
- Sound cancellation pads
- Thermal undercoating

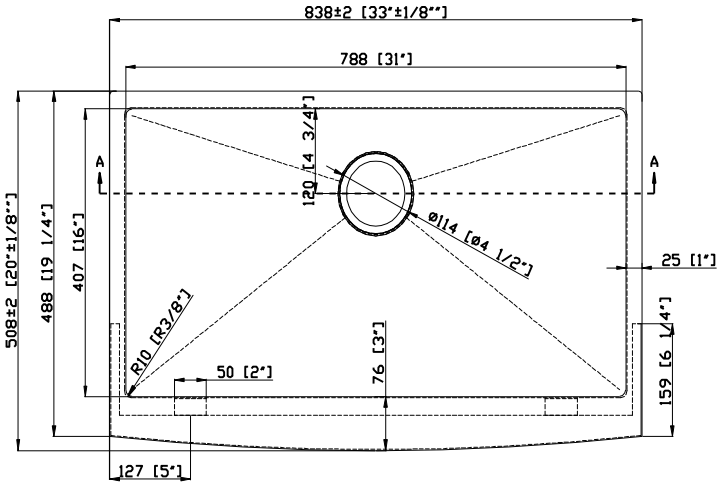

Accessories Available

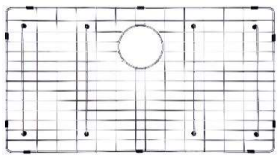

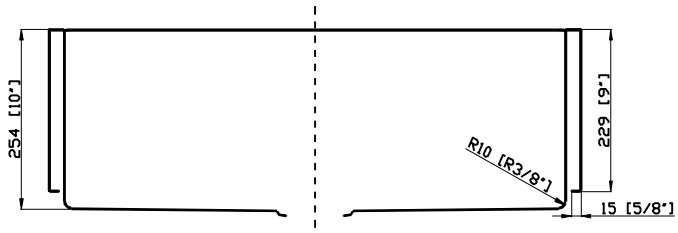

Accessory Kit Available

Contact

info@noblesinks.com

Noblesinks.com